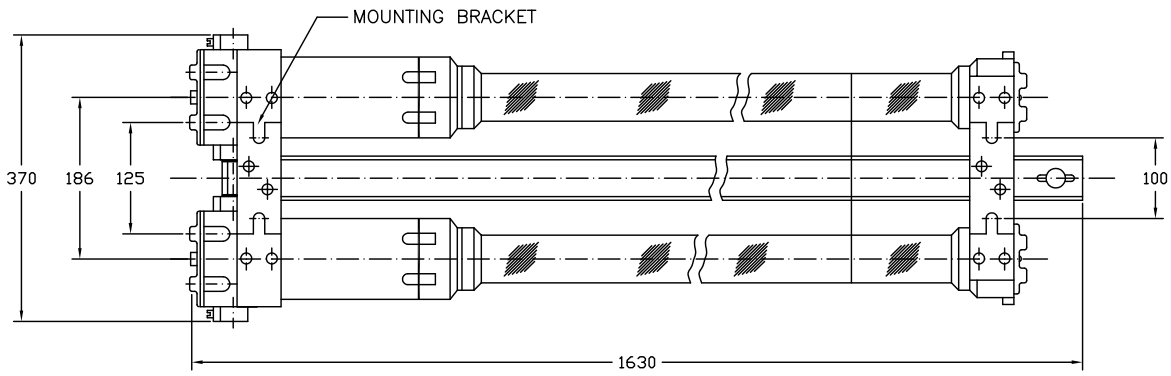

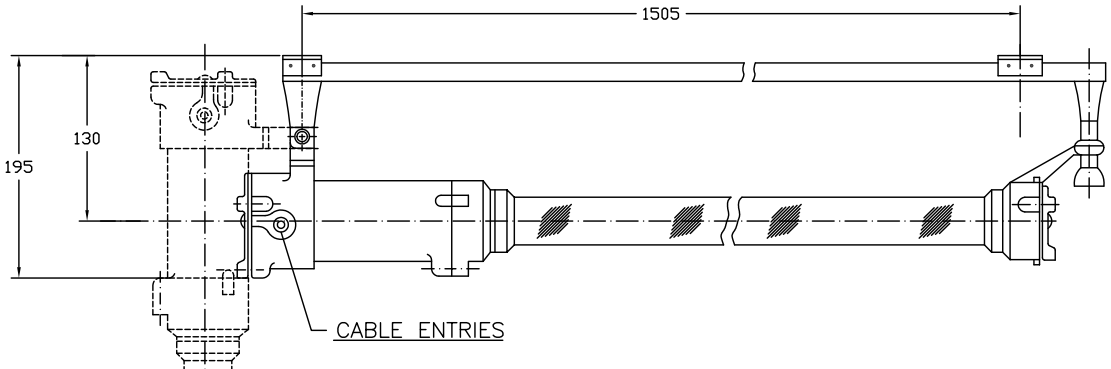

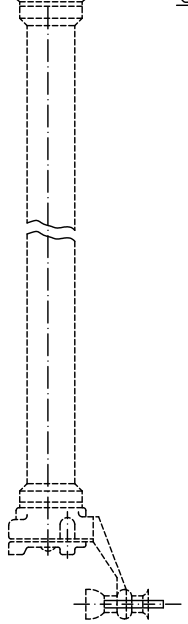

DESCRIPTION	A	B	C	D
20 W. SINGLE 2'	1020	906	225	100
40 W. SINGLE 4'	1630	1505	225	100

NOTES :

1 : GROUPS – IIA & IIB AS PER IS:2148/1981 & IS:2206 (PART –II) 1976.
2 : DEGREE OF PROTECTION – IP–65 AS PER IS : 2147/1962.
3 : MATERIAL – CAST ALUMINIUM ALLOY LM6.
4 : EARTHING 1 No. INTERNAL & 2 Nos. EXTERNAL SCREW SIZE M6.
5 : GASKET – NEOPRENE
6 : FINISH – LIGHT GREY EPOXY SHADE No. 631 OF IS:5.
7 : CABLE ENTRIES – 2 Nos. 3/4" ET
8 : GLASS – HEAT RESISTANT BOROSIL MAKE.
9 : WIREGUARD – M.S. 5mm ø WIRE WHITE EPOXY POWDER COATED
10 : REFLECTOR – M.S. EPOXY POWDER COATED.

OVERALL DIMENSION : ±10mm

CUSTOMER			TITLE :– FLP–WP FLUORESCENT LIGHT FITTING (SINGLE)				
PROJECT							
CONSULTANT							
DRAWN	SM		SCG Ex d TECH PVT. LTD. CHENNAI–600 032				
CHECKED	DKK						
APPROVED	GK						
SCALE	NTS	FILE REF. LF/1271	CAT.NO. SC/991271	CMRS CERT No. CMRI/TC/H4 DATE 10.08.94.	GA.DRG.No. SCG/OF0000/LF1271/0001	REV. 0	DATE 14/11/05